SYRACUSE

VOCATIONAL AND SPECIALTY TRANSFER CASES
DESIGNED AND MANUFACTURED IN THE U.S.A.

RATIO OPTIONS:
UNDERDRIVES TO 2.704:1 LOW
OVERDRIVES TO 0.764:1 HIGH

OPTIONAL* DIRECT MOUNT DESIGNS
SUPPORT ALL COMMON LIGHT TRUCK
GEOMETRIES

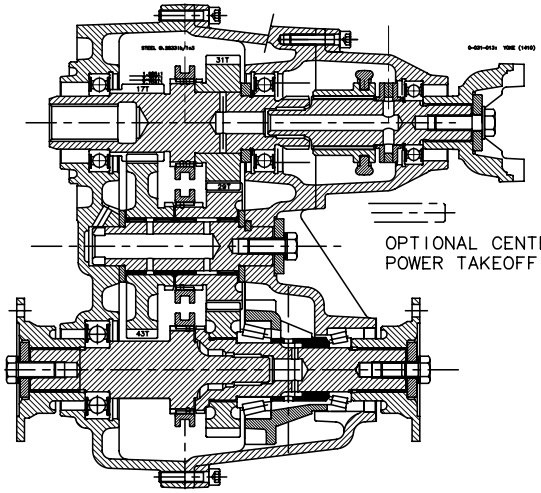

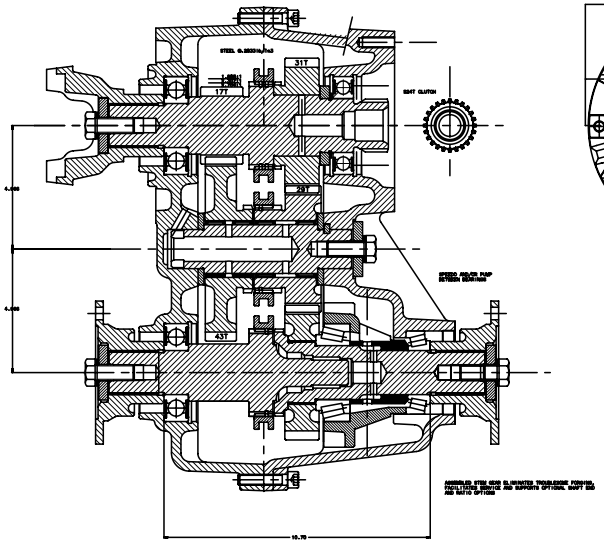

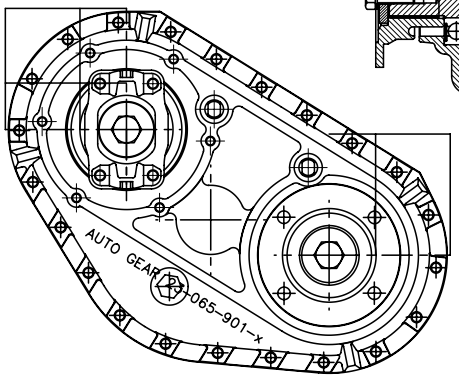

DECLUTCHABLE LOWER AXIS

*IMPORTANT! AVAILABILITY OF OPTIONAL FEATURES MAY
DEPEND UPON PURCHASE OF TOOLING, PRODUCTION VOLUME
COMMITMENTS AND EXTENDED LEADTIMES FOR DELIVERY

LET	CHANGE

21-000-xxx-A

ASE

21-000-xxx-A